下线检测 规程
End Of Line Test Instruction

客户 **Customer:** 车辆 **Vehicles:**	上汽通用五菱 **SGMW** **CN100**	**SGMW**
系统 **System:** 制动回路布置类型 **Brake split:** 驱动型式 **Transmission type:**	**ABS_9.0CB** II 型回路布置 **II brake split** 后轮驱动 **Rear wheel drive**	
设备 **Equipment:** 诊断协议 **Diagnosis Protocol:** 通讯类型 **Tester Requests Via:**	滚筒测力计 **Roller Dynamometer** **KWP2000 On Line** **K**	
"D"		
分发对象 **Distribution list:**	客户 **Customer**	

	Name	Signature:	Date:
Checked by:	Jiang Zhigang	Jiangzhigang	2011.07.01
Approved by:	Cheng Gang	iV. Che.	04.07.2011

©博世保留商标和专利应用在内的所有权力，未经我公司许可不得复制或传递给第三方。

© All rights with Robert Bosch GmbH, including trademark / patent applications. Any right of disposal, as copying and distribution to third parties is ours.

修改记录 Modifications:

No.	Date	Modifications:	Signature
00	30.June.2011	1st edition	

诊断文件 Diagnose Documentation

No	BOSCH – No.	Edition	Date	Name	Vehicle
1	0 265 T12 029	07	14.June.2011	Functional description of diagnosis 诊断功能描述	CN100

附件 Attachments

No	BOSCH – No.	Name	Vehicle
1	----------	SGMW CN100 ABS 9 with II brake split circuit Hydraulic Circuit Diagrams	CN100
2	0 265 A69 051-747	SGMW CN100 ABS 9 offer drawing	CN100
3	Y 369 B80 239/C	SGMW CN100 ABS 9 Wiring Diagrams	CN100

©博世保留商标和专利应用在内的所有权力，未经我公司许可不得复制或传递给第三方。

© All rights with Robert Bosch GmbH, including trademark / patent applications. Any right of disposal, as copying and distribution to third parties is ours.

目录 Table of Content:

1 综述 General 4

1.1 诊断文件 Diagnose Documentation 4
1.2 首字母缩写 Acronyms 4

2 应用 application 5

3 诊断次序 Diagnostic sequence description 6

4 下线检测过程步骤描述 EOL Process Step Description 7

4.1 轮速传感器测试（转毂驱动） Wheel Speed Sensor Test (rolls with external drive) 8
4.2 ABS 动态测试（4 个独立转毂） ABS dynamic test 14
4.2.1 概述 General description 14
4.2.2 ABS 动态测试图表 ABS Dynamic test diagram 15
4.2.3 动态测试 ABS 液压功能图 Schematic Diagram of ABS Dynamic Test HU Functions 16

5 通讯指令 Communication Command 19

5.1 建立通讯 Communication Setup 19
5.2 建立诊断模式 Start Diagnostic Mode 20
5.3 电子控制单元识别 ECU-Identification 21
5.4 清除故障代码 Clear DTC 23
5.5 读取故障代码 Read DTC 24
5.6 读取抽空加注过程字节 Read E&F Process Byte 26
5.7 检查系统状态 Check System Status 28
5.8 进入安全模式 Security Access 29
5.9 禁用阀组继电器关闭功能/ Valve relay shut down deactivation 31
5.10 开始轮速传感器测试 Start WSS Test 32
5.11 评估轮速传感器测试结果 Evaluation WSS Test Result 33
5.12 动态测试 Dynamic Test 34
5.13 写入下线检测过程控制字节 Write EOL Process Control Byte 37
5.14 启用阀组继电器关闭功能 Valve relay shutdown activation 38
5.15 结束诊断 End of diagnostics 38

6 阀保护措施 Valve protective measures 39

7 测试设备信息 Test Rig Information 42

8 附件 Attachments 44

8.1 ABS II 型回路液压图 ABS with II brake split circuit Hydraulic Circuit Diagrams 44
8.2 SGMW CN100 ABS9 总成图纸 SGMW CN100 ABS9 Offer Drawing 45
8.3 SGMW CN100 电气线路图 SGMW CN100 ABS9 Wiring Diagrams 46

©博世保留商标和专利应用在内的所有权力，未经我公司许可不得复制或传递给第三方。

© All rights with Robert Bosch GmbH, including trademark / patent applications. Any right of disposal, as copying and distribution to third parties is ours.

1 综述 General

1.1 诊断文件 Diagnose Documentation

No	BOSCH – No.	Edi-tion	Date	Name	Vehicle
1	0 265 T12 029	07	14.June.2011	Functional description of diagnosis 诊断功能描述	CN100

1.2 首字母缩写 Acronyms

ABS	防抱死制动系统 antilock braking system
ABS-SILA	防抱死制动系统警告灯 ABS warning light
AV	出液阀 outlet valve
AY	加速度传感器 acceleration sensor
BLS	刹车灯开关 break light switch
DTC	诊断故障码 diagnostic trouble code
ECU	电子控制单元 electronic control unit
EV	进液阀 inlet valve
FA	前轴 front axle
FCM	故障码存储器 fault code memory
FL	前左 front left
FR	前右 front right
PB	过程字节 process byte
RA	后轴 rear axle
RFP	循环电机泵 recirculation pump
RL	后左 rear left
RR	后右 rear right
SV	电磁阀 solenoid valve
UM	电机泵反馈 pump motor feedback
WSS	轮速传感器 wheel speed sensor

©博世保留商标和专利应用在内的所有权力，未经我公司许可不得复制或传递给第三方。

© All rights with Robert Bosch GmbH, including trademark / patent applications. Any right of disposal, as copying and distribution to third parties is ours.

2 应用 application

为确保博世 ABS 系统能正常工作，本文描述了博世推荐的正确测试方法和车辆装配后的接口定义。
该测试以 K 诊断和相应的功能为基础，可采用两轴式制动转毂试验台。测试所有采用的都是只读存储程序。
客户/车辆特定的“诊断功能说明”适当的版本，提供了诊断及其使用特性的操作和功能信息。

This document describes test steps which are recommended to ensure the correct function of the Bosch ABS system and its interfaces after the vehicle assembly.
The tests are based on K diagnosis. The dynamic tests are carried out using a 2-axle brake dynamometer. All used tests are ROM resident functions. The appropriate version of the customer/vehicle specific “Functional description of diagnosis” provides information on the handling and function of the diagnosis.

备注：
本规程已优化测试步骤和测试时序来满足较短的循环时间，有效避免系统的双重检测。
如果在车辆上执行 ABS 以外其他的动态功能检测，ABS 系统将可能被激活而导致检测失效。

Note:
The test steps and the test timing is optimized in order to meet a short cycle time and to avoid double checks of the system.
If dynamic functional tests other than the ABS end of line test are performed on the vehicle the ABS could be activated or the system disabled due to error detection.

©博世保留商标和专利应用在内的所有权力，未经我公司许可不得复制或传递给第三方。

© All rights with Robert Bosch GmbH, including trademark / patent applications. Any right of disposal, as copying and distribution to third parties is ours.

3 诊断次序 Diagnostic sequence description

诊断步骤 Diagnostic Step:	诊断功能 Diagnostic function:	参考章节 Details chapter:
01	建立通讯 Communication Setup	**5.1**
02	建立诊断模式 Start Diagnostic Mode	**5.2**
03	车辆信息识别 ECU Identification	**5.3**
04	清除故障代码 Clear DTC	**5.4**
05	读取故障代码 Read DTC	**5.5**
06	检查抽真空加注过程字节 Check E&F Process Byte	**5.6**
07	检查系统状态（阀组与电机状态） Check system status(VR & MR status)	**5.7**
08	进入安全模式（可选） Security Access (optional)	**5.8**
09	禁用阀组继电器关闭功能 Valve relay shut down deactivation	**5.9**
10	轮速传感器测试 WSS Test	**5.10**
11	评估轮速传感器测试结果 Evaluation WSS Test Result	**5.11**
12	动态测试 Dynamic Test	**5.12**
13	写入下线检测过程字节 Write EOL Process Byte	**5.13**
14	读取故障代码 Read DTC	**5.5**
15	清除故障代码 Clear DTC	**5.4**
16	启用阀组继电器关闭功能 Valve relay shutdown activation	**5.14**
17	结束诊断 End of diagnostics	**5.15**

©博世保留商标和专利应用在内的所有权力，未经我公司许可不得复制或传递给第三方。

© All rights with Robert Bosch GmbH, including trademark / patent applications. Any right of disposal, as copying and distribution to third parties is ours.

4 下线检测过程步骤描述 EOL Process Step Description

所有的博世 ABS 系统部件，如电子控制单元，液压调节模块，轮速传感器，在运输到客户装配生产厂前都单独在博世装配线上检测过。
整个系统包括汽车的接口，仪表盘的指示灯和供电电源在客户工厂第一时间组装，检测连线和功能是否正确。
电子控制单元能执行许多复杂的自我监控软件，例如连续和偶然性测试，并且在有错误的情况下识别这些错误和储存错误代码号下线检测用这个特性来读出错误代码，为修理工作提供错误识别信息
然而，有些错误不能被电子控制单元本身检测（例如液压管路或轮速传感器的交叉连接和一些输入信号的恰当的机能如制动灯开关）。为了找到这些错误，当车辆休息时应该进行静态测试，并且在测力计进行动态测试。
测试的主要内容是检测：
- 所有电子控制单元的输入输出信号功能是否正确
- 所有轮速传感器的功能是否正确（信号质量和相关性）
- 所有阀和液压部件的功能是否正确（功能和相关性）

ABS 液压处理模块以干燥状态（无制动液）提交给客户。因此它需要使用阀和泵马达的相应的诊断来在线上抽真空和加注为了保证正确的过程，需要把一个加注字节 存储到电子控制单元的 EEPROM 内。抽真空加注设备可以存储这个字节的值，并且该值可以在下线检测中查出验证先前的过程。
设计的整个测试过程涵盖了系统的所有重要内容并且最大程度上缩短了测试时间。

All The Bosch ABS components, such as ECU, hydraulic modulator, wheel speed sensors, are checked individually in the Bosch assembly line prior to shipment to the customers assembly plants.
The entire system including harnesses, dashboard lights and power supply of the vehicle is assembled the first time at the customer plant and must be checked for proper connections and functions.
The ECU is capable to run a number of complexity self monitoring software features, such as continuity and plausibility checks and in case of errors to identify these faults and to store fault code numbers.
This feature is used at the end of line test by reading out the fault codes as error identification as well as information for repair works.
However, some of the failures can not be detected by the ECU itself (such as cross connections of hydraulic pipes or wheel speed sensors and correct functioning of some input signals, i.e. brake light switch). In order to find these failures static or dynamic tests should be performed while the vehicle is at rest or during a dynamic test on a dynamometer.
The major items of this test steps is to check for:
- correct functioning of all input and output signals of the ECU
- correct functioning of all wheel speed sensors (signal quality and correlation)
- correct functioning of all valves and hydraulic components (functioning and correlation)

The ABS hydraulic modulator is shipped to the customer in a dry state (no brake fluid). Therefore it needs to be evacuated and filled on line by using diagnosis for valve and pump motor activation's. To ensure the proper process, a process byte can be stored in the EEPROM of the ECU. The value of the byte is stored by the evac/fill or bleed equipment and can be checked at the end of line test to verify the previous processes.
The entire test procedure is designed to cover all the important items of the system and to minimize the testing time.

对客户提供的测试设备的要求 Requirements for the test facilities:
- 与博世电子控制单元的通信 Communication with the Bosch ECU
- 测试序列的控制 Control of the test sequence
- 测力计的控制 Control of the dynamometer
- 测试数据的评估 Evaluation of the test data
- 发布流程协议 Issue test protocol

©博世保留商标和专利应用在内的所有权力，未经我公司许可不得复制或传递给第三方。

© All rights with Robert Bosch GmbH, including trademark / patent applications. Any right of disposal, as copying and distribution to third parties is ours.

4.1 轮速传感器测试（转毂驱动） Wheel Speed Sensor Test (rolls with external drive)

本文件描述了两种方式进行传感器的相关性测试：
1. 转毂顺序转动
2. 转毂各自以不同速度转动，可以减少时间但需要转毂支持
This document described two versions for the wheel speed sensor test corrABSonding of the exist test bench.
One kind of wheel speed sensor should be used.
Version 1: All roller pairs will be actuate one after the other
Version 2: The second solution allows a shorter process time but a test bench is needed with the ability to drive the roller pairs together with different speed values.

方式一： **Version 1:**

轮速传感器测试（相关性和信号质量检测；方式一） Wheel speed sensor test (correlation and signal quality check; Version 1)				
Test bench:		ECU data:		Requested data:
Roll front left Roll front right Roll rear left Roll rear right	On; 5 km/h Off; 0 km/h Off; 0 km/h Off; 0 km/h	Wheel FL: min/max Wheel FR: min/max Wheel RL: min/max Wheel RR: min/max	xx km/h xx km/h xx km/h xx km/h	4,5 km/h < xx < 5,5 km/h 0,0 km/h < xx < 1,0 km/h 0,0 km/h < xx < 1,0 km/h 0,0 km/h < xx < 1,0 km/h
Roll front left Roll front right Roll rear left Roll rear right	On; 5 km/h On; 5 km/h Off; 0 km/h Off; 0 km/h	Wheel FL: min/max Wheel FR: min/max Wheel RL: min/max Wheel RR: min/max	xx km/h xx km/h xx km/h xx km/h	4,5 km/h < xx < 5,5 km/h 4,5 km/h < xx < 5,5 km/h 0,0 km/h < xx < 1,0 km/h 0,0 km/h < xx < 1,0 km/h
Roll front left Roll front right Roll rear left Roll rear right	On; 5 km/h On; 5 km/h On; 5 km/h Off; 0 km/h	Wheel FL: min/max Wheel FR: min/max Wheel RL: min/max Wheel RR: min/max	xx km/h xx km/h xx km/h xx km/h	4,5 km/h < xx < 5,5 km/h 4,5 km/h < xx < 5,5 km/h 4,5 km/h < xx < 5,5 km/h 0,0 km/h < xx < 1,0 km/h
Roll front left Roll front right Roll rear left Roll rear right	On; 5 km/h On; 5 km/h On; 5 km/h On; 5 km/h	Wheel FL: min/max Wheel FR: min/max Wheel RL: min/max Wheel RR: min/max	xx km/h xx km/h xx km/h xx km/h	4,5 km/h < xx < 5,5 km/h 4,5 km/h < xx < 5,5 km/h 4,5 km/h < xx < 5,5 km/h 4,5 km/h < xx < 5,5 km/h
Roll front left Roll front right Roll rear left Roll rear right	On; 5 km/h On; 5 km/h On; 5 km/h On; 5 km/h	Wheel FL: min/max Wheel FR: min/max Wheel RL: min/max Wheel RR: min/max	xx km/h xx km/h xx km/h xx km/h	4,5 km/h < xx < 5,5 km/h 4,5 km/h < xx < 5,5 km/h 4,5 km/h < xx < 5,5 km/h 4,5 km/h < xx < 5,5 km/h

©博世保留商标和专利应用在内的所有权力，未经我公司许可不得复制或传递给第三方。

© All rights with Robert Bosch GmbH, including trademark / patent applications. Any right of disposal, as copying and distribution to third parties is ours.

备注：
这里所列的数据值仅供参考，最终数据值需制造商通过试验来确定。
为了检测传感器的相关性（连接传感器与相应的车轮），测试设备逐一地开启各个车轮。测试速度必须匹配测力计设计（如测试速度为5千米/小时）。
测试设备记录了来自电子控制单元的轮速数据并验证这些信号。
在测试信号质量时，所有的车轮开启（相关性测试一结束进行）。
电子控制单元运行内部线程，记录至少一次旋转的所有传感器的数据，存储测试期间的最小最大的速度数据，并在测试完成以后输出数据给测试设备。
测试实验台计算机评估这些数据，与内部界定数据比较。

传感器错误测出 ⇒ 错误消息，继续
没有错误测出 ⇒ 继续

Remarks:
The speed of the min/max values are proposals and should be defind by trails of the manufacturer.
To check the correlation of the sensors (connection of sensor to the corrABSonding wheel), the test rig turns on the individual rolls one after the other. The test speed must be adapted to the dynamometer design. (e.g. test speed = 5 km/h).
The tester records the wheel speed data received from the ECU and verifies the signals.
During the signal quality test, all rolls will be turned on (this step will be executed immediately after the correlation test).
The ECU runs an internal routine that records all sensor data over at least one revolution, stores the minimum and maximum speed data of each wheel during the test time and outputs these data to the tester after the test has been finished.
The test bench computer evaluates these data and compares them with internal limit data.

Sensor failure detected ⇒ Failure message, continue
No failures detected ⇒ Continue

轮速传感器误差计算：
Bosch 建议允许公差： ±10%

For calculation of the allowed WSS tolerance:
V rolls = 5km/h
WSSmin = 5km/h – 10% = 4,5 km/h
WSSmax =5km/h + 10% = 5,5 km/h

Bosch recommends tolerance: ±10%

这里的误差计算考虑到胎压的影响，测试台和 ECU 的误差影响，最终的公差值应充分考虑上述影响，由客户通过试验来确定。

The given tolerances are calculated concerning of tyre pressure, tolerance of the test bench and the ECU electrical circuit tolerance. The valid tolerance must be found and confirmed by trials at the customer.

©博世保留商标和专利应用在内的所有权力，未经我公司许可不得复制或传递给第三方。

© All rights with Robert Bosch GmbH, including trademark / patent applications. Any right of disposal, as copying and distribution to third parties is ours.

方式一测试图表： **Version 1 Test diagram:**

轮速传感器测试（安装位置，相关性和信号质量检测）
Wheel speed sensor test (mounting position, correlation and signal quality check)

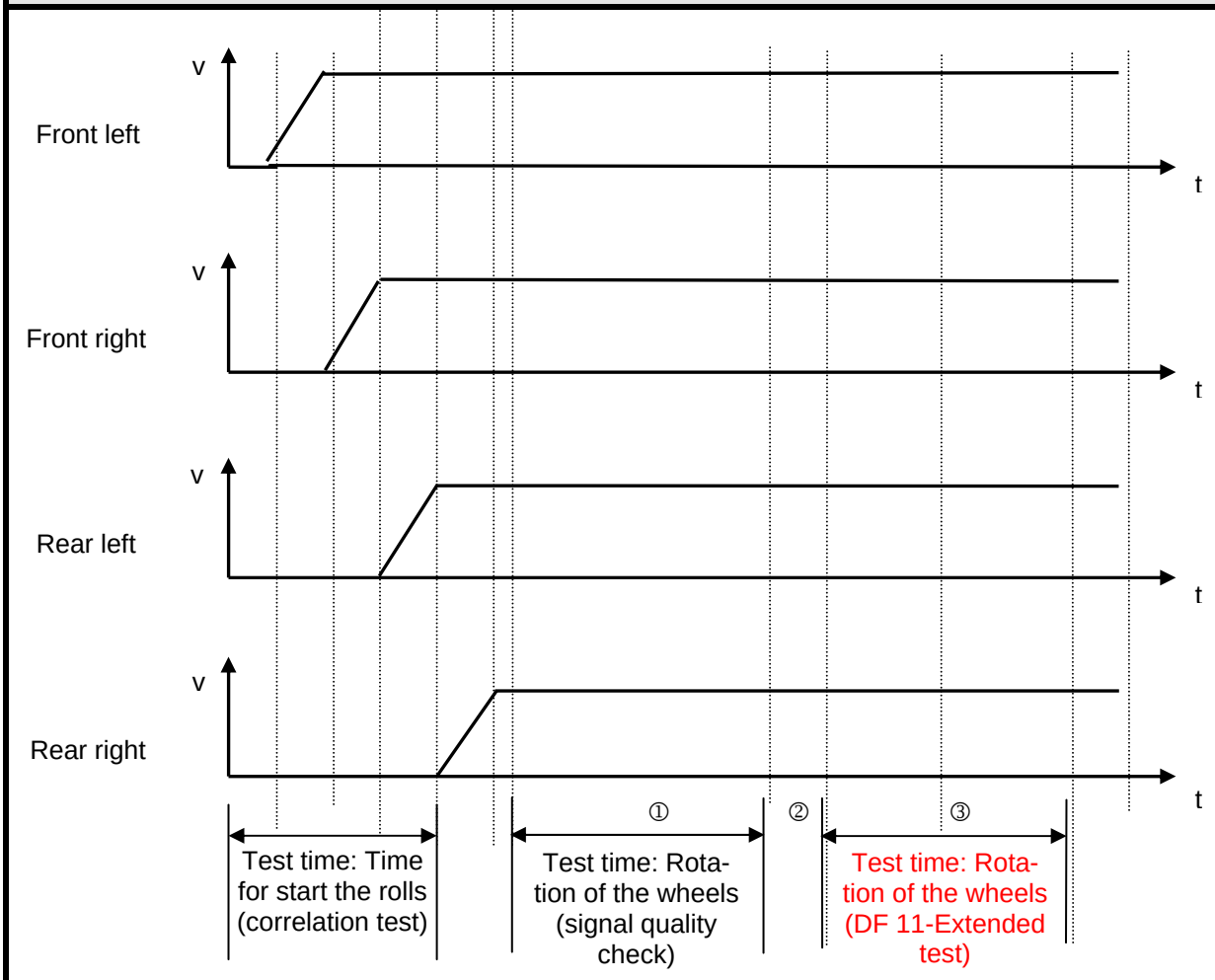

备注：
这个实验台通过外部逐步驱动开启各个车轮的同时测试设备请求传感器的速度数据，检测正确的相关性。然后测试设备检测全部车轮至少一周旋转的传感器质量，评估传感器信号在某一个范围。电子控制单元每10毫秒提高任意一个传感器速度，为了识别有关传感器，带齿的车轮，气隙或偏离的错误，存储并输出速度数据的最大最小值（在测试期间）。

Remarks:
The test rig turns on the individual rolls by external drives step by step while the tester request the speed data of the sensors and checks the correct correlation. The tester then runs a function that checks the sensor quality over a minimum of one revolution for all wheels and evaluates whether the speeds are within a certain limit, The ECU internally picks up each sensor speed every 10 ms, stores and outputs the minimum and maximum speed data (within the test time) in order to identify faults of the sensor, toothed wheels, air gaps or eccentricities.

©博世保留商标和专利应用在内的所有权力，未经我公司许可不得复制或传递给第三方。

© All rights with Robert Bosch GmbH, including trademark / patent applications. Any right of disposal, as copying and distribution to third parties is ours.

方式二： **Version 2:**

轮速传感器测试（相关性和信号质量检测；方式二） Wheel speed sensor test (correlation and signal quality check; Version 2)				
Test stand:		ECU data:		Requested data:
Roll front left Roll front right Roll rear left Roll rear right	On; 3 km/h On; 6 km/h On: 9 km/h On; 12 km/h	Wheel FL : min/max Wheel FR : min/max Wheel RL : min/max Wheel RR : min/max	xx km/h xx km/h xx km/h xx km/h	2,7 km/h < xx < 3,3 km/h 5,4 km/h < xx < 6,6 km/h 8,1 km/h < xx < 9,9 km/h 10,8 km/h < xx < 13,2 km/h

备注：
每对转毂的最大最小速度应通过试验来确定。
为了检测传感器的相关性（连接传感器与相应的车轮）和信号的质量，转毂各自分别转动，速度应和设备相适应，例如：3，6，9，12 km/h。
设备应记录下 ECU 发出来的各轮的速度值并检验，在测试中所有转毂都是转动的。
电子控制单元运行内部线程，记录至少一次旋转的所有传感器的数据，存储测试期间的最小最大的速度数据，并在测试完成以后输出数据给测试设备。
测试实验台计算机评估这些数据，与内部界定数据比较。

传感器错误测出 ⇒ 错误消息，继续
没有错误测出 ⇒ 继续

Remarks:

The speed of the once roller pairs and the min/max values are proposals and should be defined by trails of the manufacturer.

To check the correlation (connection of sensor to the corrABSonding wheel) and signal quality of the sensors, the test rig turns on the individual rolls together. The test speed must be adapted to the dynamometer design, e.g. test speed = 3, 6, 9, 12 km/h.

The tester records the wheel speed data received from the ECU and verifies the signals.

During the test, all rolls will be turned on.

The ECU runs an internal routine that records all sensor data at one revolution, stores the minimum and maximum speed data of each wheel during the test time and outputs these data to the tester after the test has been finished.

The test bench computer evaluates these data and compares them with internal limit data.

Sensor failure detected ⇒ Failure message, continue
No failures detected ⇒ Continue

©博世保留商标和专利应用在内的所有权力，未经我公司许可不得复制或传递给第三方。

© All rights with Robert Bosch GmbH, including trademark / patent applications. Any right of disposal, as copying and distribution to third parties is ours.

方式二测试图表： **Version 2 Test diagram:**

轮速传感器测试（相关性和信号质量检测）
Wheel speed sensor test (correlation and signal quality check)

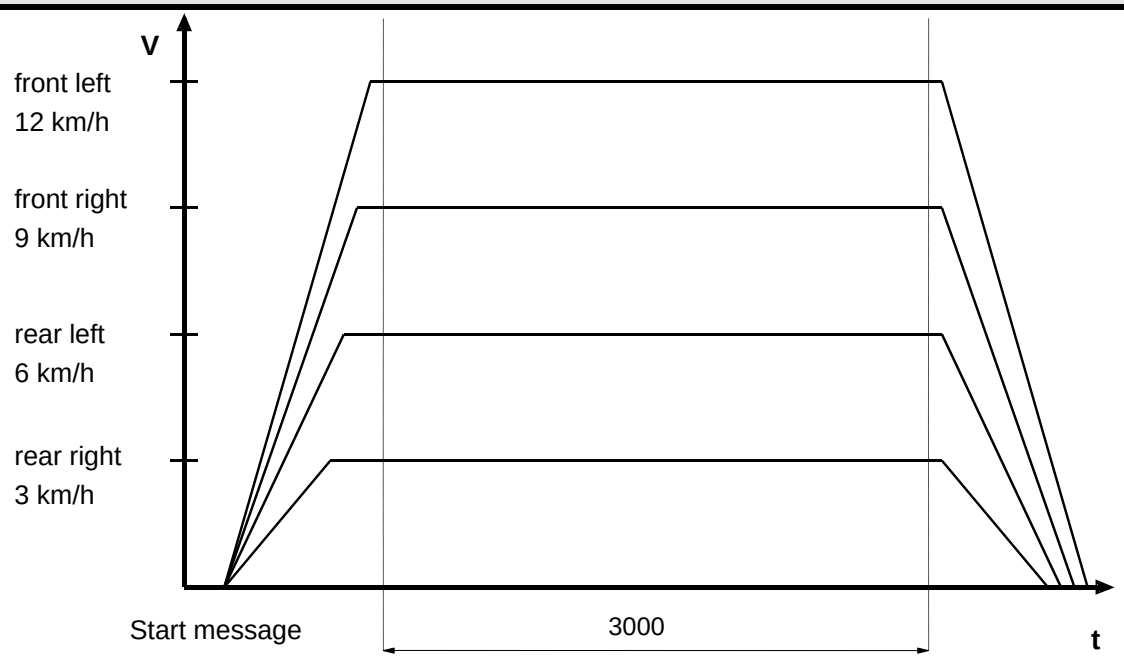

Signal quality and correlation check one rotation of the wheels
The values are examples und must be defined by the customer

备注：
这个实验台通过外部以不同速度驱动开启各个车轮的同时测试设备请求传感器的速度数据，检测正确的相关性。然后测试设备检测全部车轮至少一周旋转的传感器质量，评估传感器信号在某一个范围。电子控制单元每10毫秒提高任意一个传感器速度，为了识别有关传感器，带齿的车轮，气隙或偏离的错误，存储并输出速度数据的最大最小值（在测试期间）。

Remarks:
The test rig turns on the individual rolls by external drives with a different speed while the tester request the speed data.
The test check the correct allocation of the wires with the corrABSonding sensors and checks the sensor quality over a minimum of one revolution for all wheels and evaluates whether the speeds are within a certain limit. The ECU internally picks up each sensor speed every 10 ms, stores and outputs the minimum and maximum speed data (within the test time) in order to identify faults of the sensor, toothed wheels, air gaps or eccentricities.

如果车轮速度超过 10km/h，ECU 将无法进入客户生产线诊断模式，没有任何响应。这时可以关闭速度限制来进行测试。
If the vehicle speed is more than 10Km/h, the ECU can not change into the Customer Plant Diagnostic mode and does not rABSond to any request. The speed limit must be deactivated if speed increase to more than 10 Km/h.

©博世保留商标和专利应用在内的所有权力，未经我公司许可不得复制或传递给第三方。

© All rights with Robert Bosch GmbH, including trademark / patent applications. Any right of disposal, as copying and distribution to third parties is ours.

信号质量测试（以一个车轮的为例）Signal quality test (example of one wheel):

信号质量测试（以一个车轮的为例）Signal quality test (example of one wheel):

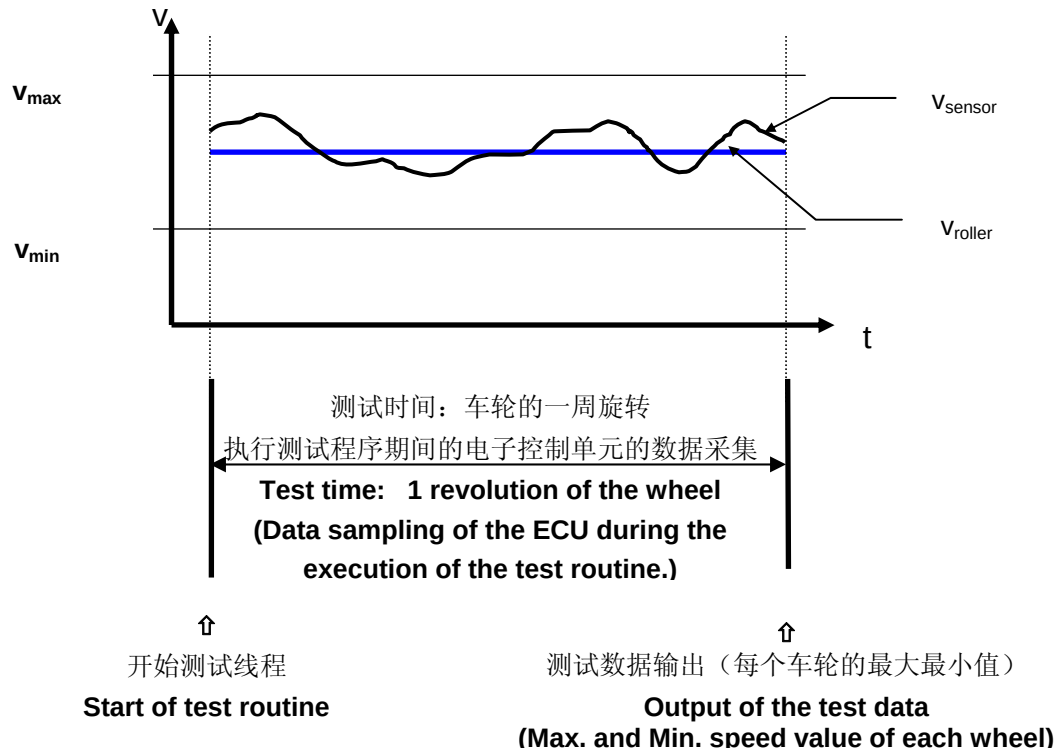

备注:
开始线程后，电子控制单元在执行期间连续采集所有轮速数据，检测最大最小值。
此数据传输于测试设备（对每个车轮而言）。
测试设备必须评估这些数据并匹配与限定界限。
此界限定义为满足轮速信号的技术规定公差。
轮速公差必须最小。
测试速度必须满足轮速传感器的最小速度。

Remarks:
After the routine has been started, the ECU will continuously sample all wheel speed data and check for the minimum and the maximum value during the execution time.
This data (for each wheel) is transmitted to the test equipment.
The test equipment must evaluate this data and compare with given limits.
The limits are defined to meet the specified tolerances of the wheel speed signals.
The tolerance of the roller speed must be minimized.
The test speed must be adapted onto the minimum specified speed of the wheel speed sensors.

©博世保留商标和专利应用在内的所有权力，未经我公司许可不得复制或传递给第三方。

© All rights with Robert Bosch GmbH, including trademark / patent applications. Any right of disposal, as copying and distribution to third parties is ours.

4.2 ABS 动态测试（4 个独立转毂） ABS dynamic test

4.2.1 概述 General description

ABS 动态测试 (电磁阀功能测试和阀体关系测试) Dynamic ABS Test (Solenoid valve functional test and valve correlation test)				
操作员：Operator:	测试设备： Test Rig:	制动力（牛顿）： Brake Force (N):		要求值（牛顿）： Demand Data (N):
放开制动踏板 Keep Brake Pedal released	增加左后轮制动力 Pressure Increase RL 测量制动力 Measure Brake Forces	前左轮 Wheel FL: 前右轮 Wheel FR: 后左轮 Wheel RL: 后右轮 Wheel RR:	xx N xx N xx N xx N	0N < F < 200 N 0N < F < 200 N 800N < F < 1400 N 0N < F < 200 N
放开制动踏板 Keep Brake Pedal released	解除左后轮制动力 Pressure Release RL 测量制动力 Measure Brake Forces	前左轮 Wheel FL: 前右轮 Wheel FR: 后左轮 Wheel RL: 后右轮 Wheel RR:	xx N xx N xx N xx N	0N < F < 200 N 0N < F < 200 N 0N < F < 200 N 0N < F < 200 N
放开制动踏板 Keep Brake Pedal released	增加右后轮制动力 Pressure Increase RR 测量制动力 Measure Brake Forces	前左轮 Wheel FL: 前右轮 Wheel FR: 后左轮 Wheel RL: 后右轮 Wheel RR:	xx N xx N xx N xx N	0N < F < 200 N 0N < F < 200 N 0N < F < 200 N 800N < F < 1400 N
放开制动踏板 Keep Brake Pedal released	解除右后轮制动力 Pressure Release RR 测量制动力 Measure Brake Forces	前左轮 Wheel FL: 前右轮 Wheel FR: 后左轮 Wheel RL: 后右轮 Wheel RR:	xx N xx N xx N xx N	0N < F < 200 N 0N < F < 200 N 0N < F < 200 N 0N < F < 200 N
放开制动踏板 Keep Brake Pedal released	增加前左轮制动力 Pressure Increase FL 测量制动力 Measure Brake Forces	前左轮 Wheel FL: 前右轮 Wheel FR: 后左轮 Wheel RL: 后右轮 Wheel RR:	xx N xx N xx N xx N	1600N < F < 2400 N 0N < F < 200 N 0N < F < 200 N 0N < F < 200 N
放开制动踏板 Keep Brake Pedal released	解除前左轮制动力 Pressure Release FL 测量制动力 Measure Brake Forces	前左轮 Wheel FL: 前右轮 Wheel FR: 后左轮 Wheel RL: 后右轮 Wheel RR:	xx N xx N xx N xx N	0N < F < 200 N 0N < F < 200 N 0N < F < 200 N 0N < F < 200 N
放开制动踏板 Keep Brake Pedal released	增加前右轮制动力 Pressure Increase FR 测量制动力 Measure Brake Forces	前左轮 Wheel FL: 前右轮 Wheel FR: 后左轮 Wheel RL: 后右轮 Wheel RR:	xx N xx N xx N xx N	0N < F < 200 N 1600N < F < 2400 N 0N < F < 200 N 0N < F < 200 N
放开制动踏板 Keep Brake Pedal released	解除前右轮制动力 Pressure Release FR 测量制动力 Measure Brake Forces	前左轮 Wheel FL: 前右轮 Wheel FR: 后左轮 Wheel RL: 后右轮 Wheel RR:	xx N xx N xx N xx N	0N < F < 200 N 0N < F < 200 N 0N < F < 200 N 0N < F < 200 N

©博世保留商标和专利应用在内的所有权力，未经我公司许可不得复制或传递给第三方。

© All rights with Robert Bosch GmbH, including trademark / patent applications. Any right of disposal, as copying and distribution to third parties is ours.

4.2.2 ABS 动态测试图表 ABS Dynamic test diagram

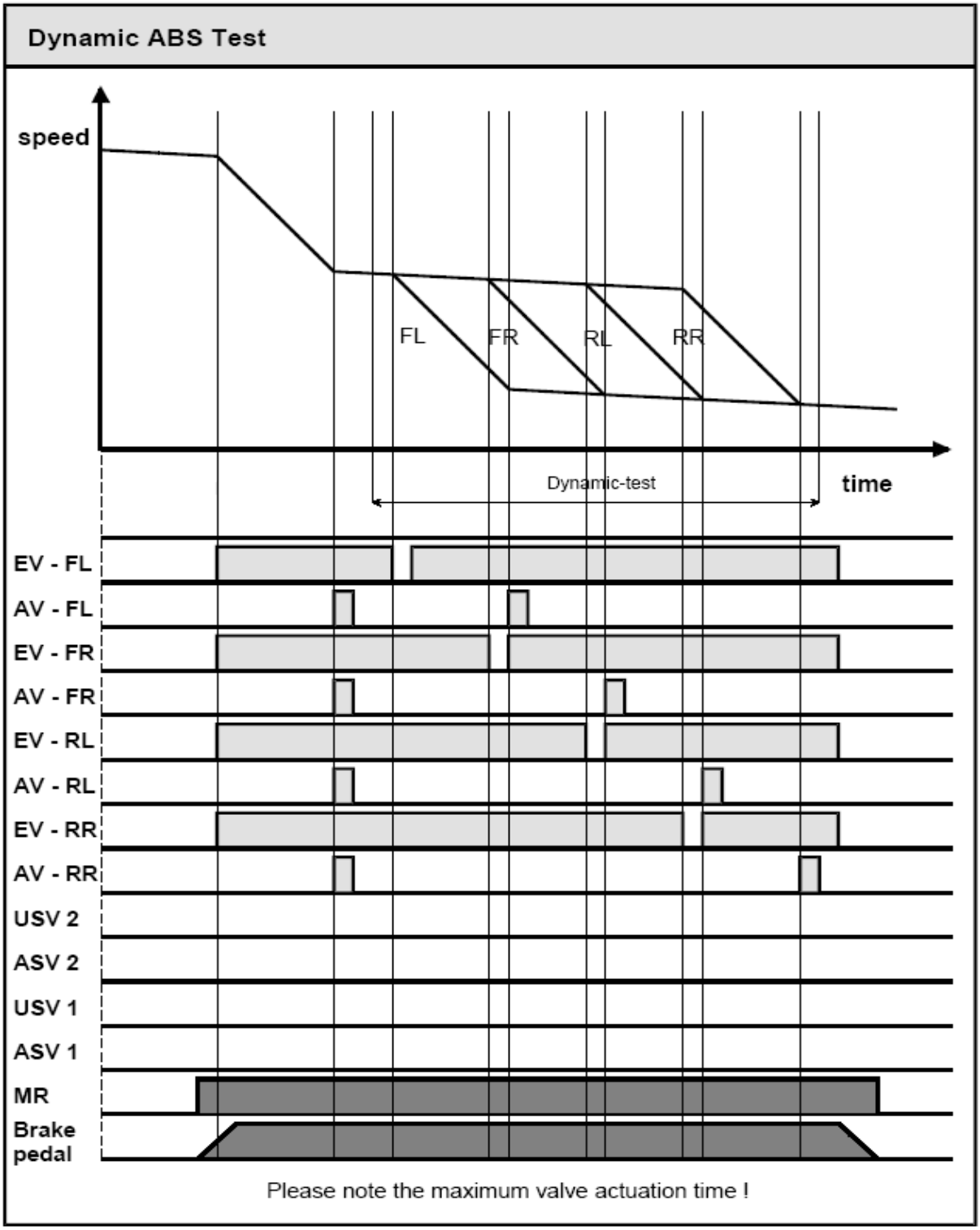

©博世保留商标和专利应用在内的所有权力，未经我公司许可不得复制或传递给第三方。

© All rights with Robert Bosch GmbH, including trademark / patent applications. Any right of disposal, as copying and distribution to third parties is ours.

4.2.3 动态测试 ABS 液压功能图 Schematic Diagram of ABS Dynamic Test HU Functions

增压 Function Pressure apply (increase function)

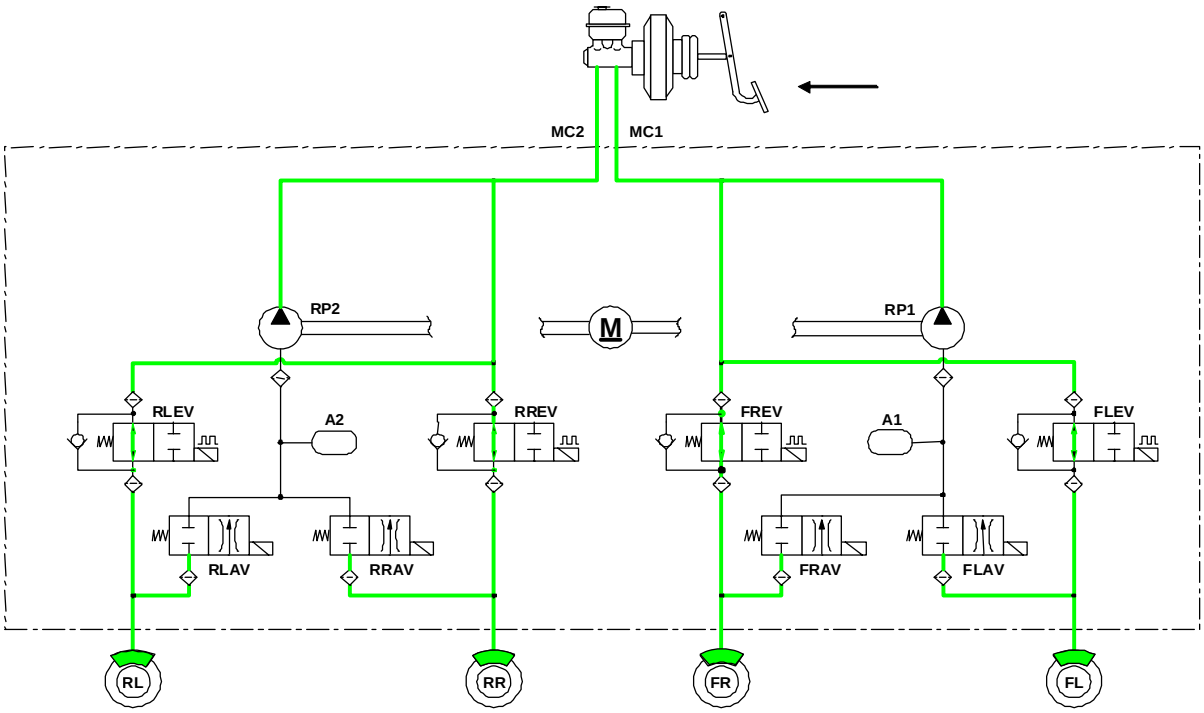

驱动一个主缸回路的导向阀，高压阀和一个进液阀。
泵在运转时液压模块内部产生一个系统压力。
在卡钳处实现通过进液阀脉冲循环控制的增压。
通常需要多个脉冲增压才能达到足够的制动力要求。

The pilot-, prime- and one inlet valve of one master cylinder circuit are energized.
While running the self sucking pump, the hydraulic modulator creates a system pressure internally.
The pressure increase pulse at the calliper is modulated by cycling the inlet valve.
General are several pulses necessary to create a sufficient brake force.

©博世保留商标和专利应用在内的所有权力，未经我公司许可不得复制或传递给第三方。

© All rights with Robert Bosch GmbH, including trademark / patent applications. Any right of disposal, as copying and distribution to third parties is ours.

保压 Function Pressure Maintain (hold function)

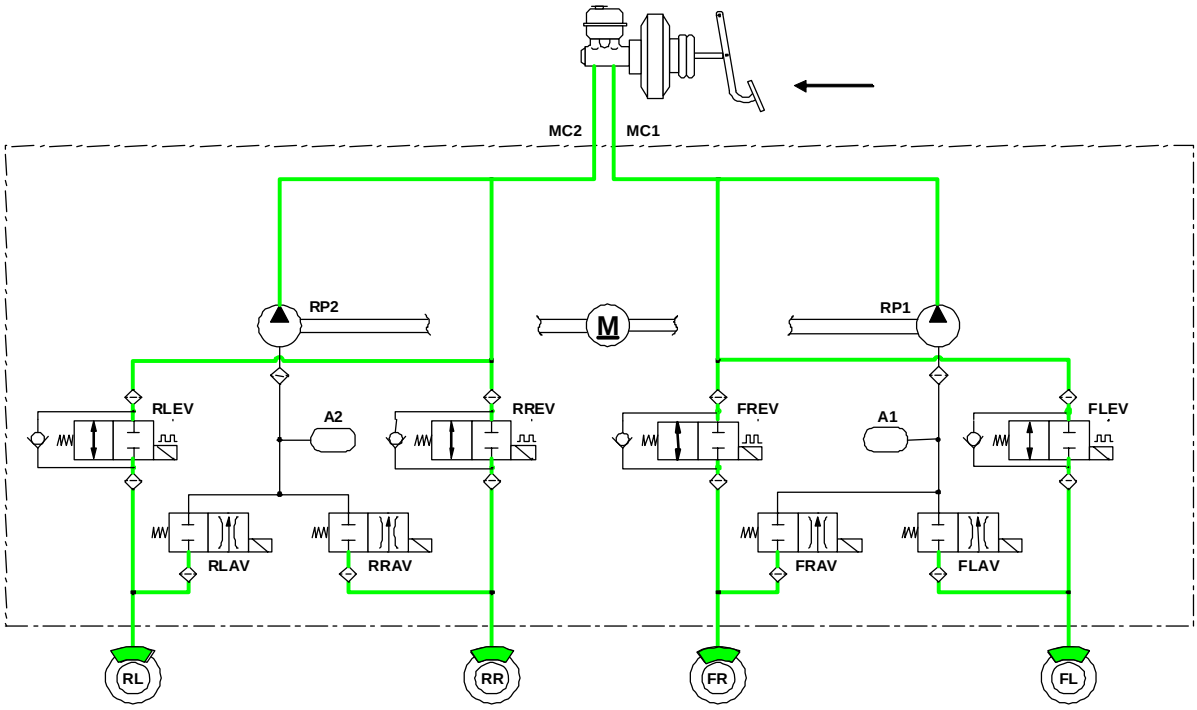

驱动进液阀和出液阀将压力锁定在卡钳和进液出液阀之间。

The created system pressure is locked between the calliper as well as the inlet and outlet valve. The outlet and inlet valve are energized.

©博世保留商标和专利应用在内的所有权力，未经我公司许可不得复制或传递给第三方。

© All rights with Robert Bosch GmbH, including trademark / patent applications. Any right of disposal, as copying and distribution to third parties is ours.

减压 Function Pressure Dump (release function)

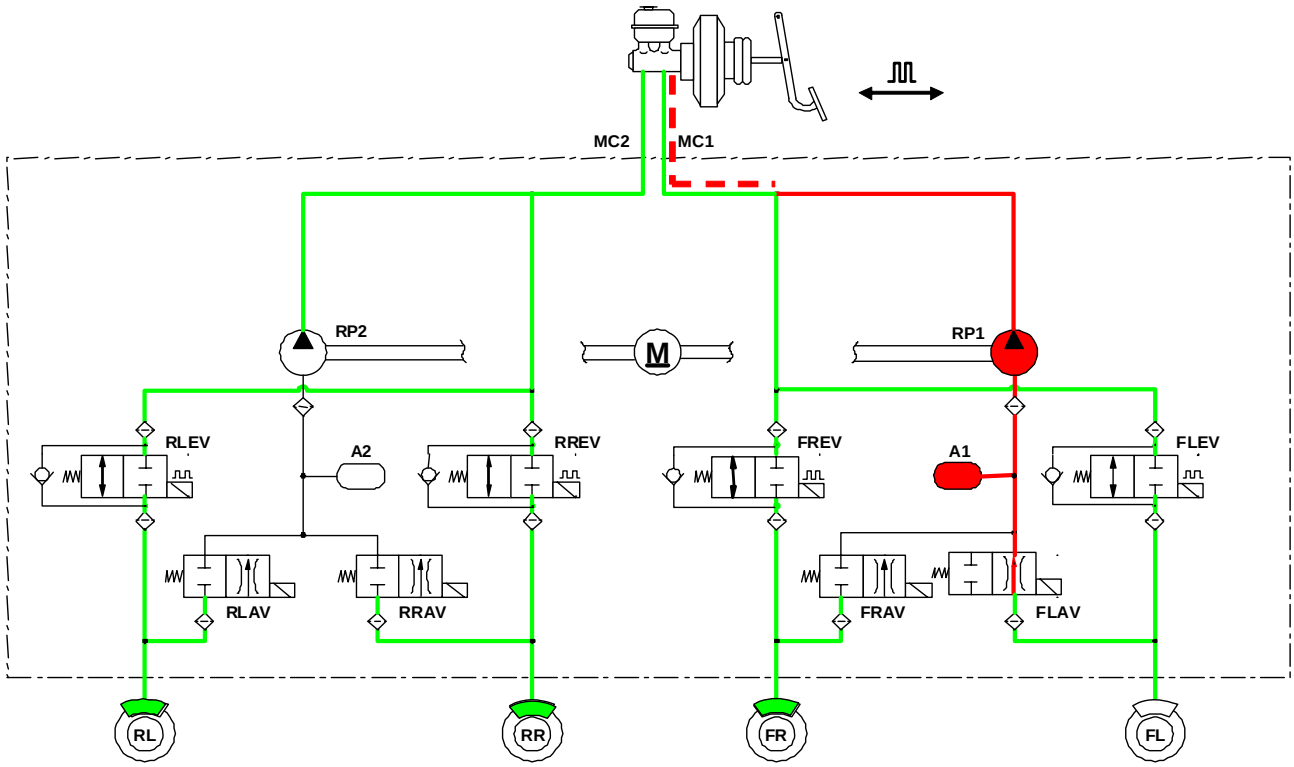

驱动一个主缸回路的导向阀，出液阀和两个进液阀。
泵在运转时将蓄能器充满同时液压模块内部产生一个系统压力。
在卡钳处实现通过出液阀循环控制的降压。

备注：
在对所有轮实施最后一次阀驱动后（在测试结束时），为排空蓄能器泵马达必须滞后两秒再停止工作。

The pilot-, outlet- and both inlet valves of one master cylinder circuit are energized.
While running the self sucking pump the accumulator chamber will be filled and the hydraulic modulator decreases the system pressure internally.
The pressure decrease at the calliper is modulated by cycling the outlet valve.

Note:
After the last valve actuation of all wheels, (at the end of the entire test) and a unpressurized system, the pump motor should be actuate two seconds longer to discharge the accumulator chamber.

©博世保留商标和专利应用在内的所有权力，未经我公司许可不得复制或传递给第三方。

© All rights with Robert Bosch GmbH, including trademark / patent applications. Any right of disposal, as copying and distribution to third parties is ours.

5 通讯指令 Communication Command

5.1 建立通讯 Communication Setup

诊断功能：建立通讯 Start communication	
服务代码 ServiceIdentifier:	81 H

肯定的回复 Positive response

服务代码 Service code:	C1 H
字节 1 Keybyte 1:	6B H
字节 2 Keybyte 2:	8F H

备注：该指令只需在联结后发送一次。在执行任何服务之前必须执行建立通讯。如因任何原因导致连接中断，都必须再次执行建立通讯。

Remark:
This tester request is allowed only once during communication set-up. StartCommunication must be executed before any other services. Serial Communication is ended in any conditions, StartCommunication must be executed again.

©博世保留商标和专利应用在内的所有权力，未经我公司许可不得复制或传递给第三方。

© All rights with Robert Bosch GmbH, including trademark / patent applications. Any right of disposal, as copying and distribution to third parties is ours.

5.2 建立诊断模式 Start Diagnostic Mode

诊断功能：建立通讯 Diagnostic Function: Start Extended Session	
服务代码 ServiceIdentifier:	10 H
诊断模式 DiagnosticMode:	83 H

肯定的回复 Positive response

服务代码 ServiceIdentifier:	50 H
诊断模式 DiagnosticMode:	83 H

备注：
参见诊断功能文件确定 ECU 每个字节的定义, 值和范围。以下章节也同样如此。
根据相应的规格，以UDS诊断为基础在测试仪和电子控制单元之间建立通信。
在系统通电之后，可以立即起动。 如果未成功建立通信，在测试中断之前应重复大约3次。
通信失败 ⇒ 设置故障信息，退出
通信成功 ⇒ 继续

Remarks:
See ECU data in diagnostic specification for details of byte numbers, values and ranges. The next chapters are same.
The communication set up between the Tester and the ECU is based on the UDS diagnosis according to the corrABSonding specification.
It can be started immediately after the system is powered up. In case of a non successful communication set up repeat for about 3 times before the test is interrupted.
Communication not successful ⇒ set failure message, Abort
Communication successful ⇒ continue

©博世保留商标和专利应用在内的所有权力，未经我公司许可不得复制或传递给第三方。

© All rights with Robert Bosch GmbH, including trademark / patent applications. Any right of disposal, as copying and distribution to third parties is ours.

5.3 电子控制单元识别 ECU-Identification

诊断功能：读取电子控制单元标志符 Diagnostic Function: ReadECUIdentification	
服务代码 Service Identifier:	1A H
代码选项 IdentificationOption	80 H

肯定的回复 Positive response

Service Positive Response Identifier	5A H
Local Identifier	80 H
Vehicle Name (ASCII, 5 bytes)	xxxxxxxxxx H
System Name (ASCII, 3 bytes)	xxxxxx H
BBNumber (BCD, 3 Bytes)	xxxxxx H
S/W Version (BCD, 4 bytes)	xxxxxxxx H
Supplier Specific Part Number (BCD, 5 bytes)	xxxxxxxxxx H
Customer Specific Part Number (ASCII) 13 bytes	xx…xx H

Remark: Byte 16... 33 will be read from EEPROM.

Remark: Supplier Specific Part Number = 0x02, 0x65, 0x80, 0x50, 0x71.

Remark: Vehicle Name (ASCII, 5 bytes) = 0x43 (’C’), 0x4E (‘N’), 0x31(‘1’), 0x30(‘0’), 0x30(‘0’).

Remark: System Name (ASCII, 3 bytes) = 0x41(‘A’), 0x42(‘B’), 0x53(‘S’).

Remark: All above bytes defined in latest DIAF

备注：字节 16... 33 从 EEPROM 中读取
被注：供应商料号= 0x02, 0x65, 0x80, 0x50, 0x71.
备注：车辆名称（ASCII, 5 个字节）= 0x43 (’C’), 0x4E (‘N’), 0x31(‘1’), 0x30(‘0’), 0x30(‘0’).
备注：系统名称（ASCII, 3 个字节）= 0x41(‘A’), 0x42(‘B’), 0x53(‘S’).
备注：以上所有字节均描述在最新诊断功能描述文件中

备注：
待评估的电子控制单元识别数据必须由客户及其装配工厂确认。
电子控制单元识别数据必须和诊断仪中存储的默认数据进行对比，以确保所选择的阀启动程序正确无误。当 ABS 软件升级时，电子控制单元识别数据将发生变更，因此诊断仪和抽真空加注设备中的数据库应当能用编辑菜单进行方便的升级。关于“电子控制单元识别”更多信息请参考客户诊断功能描述。

未知系统 ⇒ 终止测试
正确系统 ⇒ 继续

©博世保留商标和专利应用在内的所有权力，未经我公司许可不得复制或传递给第三方。

© All rights with Robert Bosch GmbH, including trademark / patent applications. Any right of disposal, as copying and distribution to third parties is ours.

Remarks:
The to be evaluated ECU identification data must be confirmed by the customer and its assembly plants.
The ECU identification data must be compared with the in the tester software stored desired ECU data. This is required to select the right valve activation sequence. The ECU identification data might be changed in case of an ABS software update rABSectively modification, therefore it must be easily possible with editor menu to update the data base of the tester rABSectively evacuation and filling equipment.
More details to the chapter “ECU identification” are to be inferred from the customer specific documentations.

Unknown System	⇒	Abort Test
System detected	⇒	Continue

©博世保留商标和专利应用在内的所有权力，未经我公司许可不得复制或传递给第三方。

© All rights with Robert Bosch GmbH, including trademark / patent applications. Any right of disposal, as copying and distribution to third parties is ours.

5.4 清除故障代码 Clear DTC

诊断功能：清除故障码 Diagnostic function: ClearDiagnosticInformationRequest	
服务代码 ServiceIdentifier:	14 H
故障码组-高字节 GroupOfDTC-HighByte:	FF H
故障码组-中字节 GroupOfDTC-MiddleByte:	FF H
故障码组-低字节 GroupOfDTC-LowByte:	FF H

肯定的回复 Positive response

服务代码 ServiceIdentifier:	54 H

备注：
详参见诊断功能文件确定 ECU 数值。
根据系统调节和车辆线束的安装情况，故障代码可能在 抽真空加注/人工排气 流程中已保存在电子控制单元内。
本步骤可以擦除电子控制单元的故障代码存储器中的内容。不能清除实际的故障代码（项目特定）。
只有在流程中可以包含定时的情况下才可能包含。否则，必须包含在另一个诊断测试在线设备中，比如生产线终点测试。当电子控制单元处于诊断模式时，只有在诊断模式并没有随着“诊断终点”指令结束条件下，才可以通过关闭电源来擦除故障代码存储器中的内容。

Remarks:
See ECU data in diagnostic spec. for details.
Depending to the adaptation onto the system and the installation of the vehicle harness, fault codes may have been stored in the ECU during the E&F/Repair Bleeding process.
This step allows erasing the fault code memory of the ECU. Different actual fault codes cannot be cleared (project specific).
It is only possible if the timing allows to be integrated in the process. Otherwise it must be included in another diagnostic test equipment on line such as the end of line testing.
Erasing the fault code memory can only be performed if the diagnostic mode is not ended with the command “end of diagnosis“, but by turning the power supply off while the ECU is in diagnostic mode.

©博世保留商标和专利应用在内的所有权力，未经我公司许可不得复制或传递给第三方。

© All rights with Robert Bosch GmbH, including trademark / patent applications. Any right of disposal, as copying and distribution to third parties is ours.

5.5 读取故障代码 Read DTC

诊断功能：读取故障码 Diagnostic function: ReadDiagnosticInformationRequest	
服务代码 ServiceIdentifier:	18 H
StatusOfDTC 0x00: report all stored DTCs with status 0x01: report DTC with Current Status 0x02: report DTC with Current Sporadic Status 0x03: report DTC with History Status	xx H

Parameter : StatusOfDTC		
Size (Byte)	**Value**	**Description**
1	0x00 0x01 0x02 0x03	All stored DTCs with status Current Current Sporadic History

肯定的回复 Positive response

肯定的服务代码回复 Service Positive Response Identifier	58h
DTC数量NumberOfDTC	xxh
DTC内容 DTC content	xxxxxxh

备注：
ECU 输出所包含的所有故障码，数据包括几种信息。最大存储个数是 10 个，输出的和实际存在的个数相等。
输出数据应评估：
- 故障码个数
- 故障码状态

测试设备应能输出故障码并报文，只有永久故障码存在才能取消测试，历史故障码应被忽略。
当前故障码 ⇒ 取消测试
无当前故障码 ⇒ 继续（忽略历史故障码）

Remarks:
The ECU outputs the content of the entire fault code memory. This data include several informations. The maximum number of stored faults is 10. The number of the transmitted fault codes is equal to the number of stored fault codes.
Out of the transmitted data, the following must be evaluated:
- Fault code number (DTC)
- The status of DTC

The tester has to evaluate the fault code data, to transform the number into a failure text and to issue a protocol.
Only permanent faults will lead to abort the test cycle. History faults must be ignored.
Current fault present ⇒ Abort test

©博世保留商标和专利应用在内的所有权力，未经我公司许可不得复制或传递给第三方。

© All rights with Robert Bosch GmbH, including trademark / patent applications. Any right of disposal, as copying and distribution to third parties is ours.

No current fault present ⇒ Continue (Ignore faults)

情形：Conditions:
根据 ECE13 的规定，轮速传感器的故障有可能在前一工位的操作中存储并以当前故障码形式存在，因此所有的轮速传感器故障（当前的历史的）在评估中均应忽略，下一步将在轮速传感器的测试中进行检测。
Due to the ECE13-Regulation, wheel speed sensor faults that may have been stored in the ECU by previous assembly equipment will stay stored as current faults. Therefore, all wheel speed sensor (current and history) must be ignored during the evaluation. These faults will be detected in test step “wheel speed sensor test”.

©博世保留商标和专利应用在内的所有权力，未经我公司许可不得复制或传递给第三方。

© All rights with Robert Bosch GmbH, including trademark / patent applications. Any right of disposal, as copying and distribution to third parties is ours.

5.6 读取抽空加注过程字节 Read E&F Process Byte

诊断功能：读取数据 Diagnostic Function: ReadDataByLocalIdentifier	
服务代码 Service Identifier:	21 H
数据代码 RecordLocalIdentifier:	02 H

肯定的回复 Positive response

服务代码 Service Identifier:	61 H
数据代码 Data Identifier:	02 H
加注字节 FillingInStatus:	XX H

Filling-in status of the hydraulic block
Filling-in status:

- 00h : Filling-in not completed
- AAh : Filling-in completed and ok
- EEh : Filling-in completed and not ok

备注：
加注字节识别先前的在线真空加注或离线排气是否正确运行。
在转毂处评估过程自节的前提是排气设备具有写入字节的功能。
在真空加注过程后或排气程序执行完毕，随着 ROM 程序的结束，电子控制单元检查阀继电器的状态，如果阀继电器的状态是无效，电子控制单元把“AA Hex”写入加注字节。此值表示完全成功的真空加注过程。
如果上述过程有任何的错误，那么“00 Hex”写入加注字节，此值表示真空加注过程未完成。
如果过程执行了，但有问题存在，那么“EE Hex”写入加注字节，表示加注完成但不成功。
博世发货状态字节是“FF Hex” 。

当前码不正确 ⇒ 取消测试
当前码正确 ⇒ 继续

Remarks:
The process control byte identifies whether the previous on line evacuate/fill process or the off line repair bleed process has been executed correctly.
The precondition to evaluate the process control byte at the end of line tests must be that the repair bleed equipment has the capability to write the process byte.
The tester writes the process control byte after the evacuation and fill or the repair bleed process. With finishing of the ROM resident functions at the end of the fill or repair bleed cycle the tester checks the valve relay status and if the status not disabled and the evac/fill or repair bleed process has been executed correct, the tester

©博世保留商标和专利应用在内的所有权力，未经我公司许可不得复制或传递给第三方。

© All rights with Robert Bosch GmbH, including trademark / patent applications. Any right of disposal, as copying and distribution to third parties is ours.

writes the process control byte to the value “AA Hex”. This value indicates a complete successful evacuation and fills process.
If there was a problem while the evac/fill or repair bleed process and the ROM resident routine early interrupted the tester write the value “00 Hex” This value indicates filling in not complete.
If the process conclude, but there was a problem the tester write the value “EE Hex” This value indicates filling in complete and NOK. Delivery status of the Bosch plant is “FF Hex”.

Process byte incorrect	⇒	Abort Test
Process byte correct	⇒	Continue

©博世保留商标和专利应用在内的所有权力，未经我公司许可不得复制或传递给第三方。

© All rights with Robert Bosch GmbH, including trademark / patent applications. Any right of disposal, as copying and distribution to third parties is ours.

5.7 检查系统状态 Check System Status

诊断功能：读取数据 Diagnostic Function: ReadDataByLocalIdentifier	
服务代码 Service Identifier:	21 H
数据代码 RecordLocalIdentifier:	09 H

肯定的回复 Positive response

服务代码 Service Positive Response Identifier:	61 H
数据代码 RecordLocalIdentifier:	09 H
数据代码 Data record Byte 1 :	00 H
数据代码 Data record Byte 2 :	01 H

检查马达状态 Check Pump Motor status

诊断功能：读取数据 Diagnostic Function: ReadDataByLocalIdentifier	
服务代码 Service Identifier:	21 H
数据代码 RecordLocalIdentifier:	10 H

肯定的回复 Positive response

服务代码 Service Positive Response Identifier:	61 H
数据代码 RecordLocalIdentifier:	10 H
数据代码 Data record Byte 1 (MSB):	00 H

备注：
在 抽真空加注/人工排气 过程前诊断设备必须识别 ECU 的状态，主动或被动状态
在检测任何失败的情形下，ECU 会关闭系统取消阀和电机的动作
下面的失败情形会导致系统的关闭：阀的错误，阀继电器的错误，电机及其继电器的错误
应通过检测软件的数值范围来校验 ECU 的数据
数据错误 ⇒ 设置故障信息，退出
数据正确 ⇒ 继续

Remarks:
Prior to the E&F/Repair Bleeding process, the diagnostic equipment must identify whether the ECU is active or passive.
In case of any failure detection, the ECU will have disabled the system and have aborted the valve and pump motor activation's.
Following failures lead to a shut down of the system: all valve faults, VR fault, RFP and MR faults.
The ECU data must be verified with the limit data of the tester software.
Data correct ⇒ Continue

©博世保留商标和专利应用在内的所有权力，未经我公司许可不得复制或传递给第三方。

© All rights with Robert Bosch GmbH, including trademark / patent applications. Any right of disposal, as copying and distribution to third parties is ours.

Data not correct ⇒ Failure message, abort

5.8 进入安全模式 Security Access

本服务指令通过转变安全水平从而进入安全模式。

通过以下两个步骤访问安全模式

1. 测试终端申请种子，ECU 发出种子 Tester requests seed, ECU sends seed
2. 测试终端发送解锁值，ECU 发出肯定回复（代表解锁值有效）并进入到安全模式

备注：访问安全模式两次失败后 ECU 会自锁 10 秒

备注：访问安全模式成功后，ECU 将会解放车辆限速机制，ECU 下线测试模式可允许车辆以速度大于 10kph 进行试验

The service SecurityAccess is used to get access to secured services by changing to different level of security. Changing the level of security is a two step procedure:

1. Tester requests seed, ECU sends seed
2. Tester sends the key, ECU sends a positive response (meaning the key was valid) and changes to the new security level

Remark: After two false attempts to change the security level the ECU is locked for 10 seconds.

Remark: After Security Access successfully, **ECU unlock vehicle speed limitation, ECUEOLMode can run at condition vehicle speed more than 10kph.**

Step.1: 申请种子/ Request Seed

TESTER → ECU: [SERVICE] - Request		
Byte	**Contents**	**Value**
0	Service Identifier	27h
1	AccessModeRequestSeed	01h

肯定的回复/ Positive Response

ECU → TESTER: [SERVICE] - Positive Response		
Byte	**Contents**	**Value**
0	Service Positive Response Identifier	67h
1	AccessModeRequestSeed	01h
2	Seed Byte 1 – High Byte	xxh
3	Seed Byte 2	xxh
4	Seed Byte 3	xxh
5	Seed Byte 4 – Low Byte	xxh

©博世保留商标和专利应用在内的所有权力，未经我公司许可不得复制或传递给第三方。

© All rights with Robert Bosch GmbH, including trademark / patent applications. Any right of disposal, as copying and distribution to third parties is ours.

Step.2: 发送解锁值/ Send Key

TESTER → ECU: [SERVICE] - Request		
Byte	**Contents**	**Value**
0	Service Identifier	27h
1	AccessModeSendKey	02h
2	Key Byte 1 – High Byte	xxh
3	Key Byte 2	xxh
4	Key Byte 3	xxh
5	Key Byte 4 – Low Byte	xxh

肯定的回复/ Positive Response

ECU → TESTER: [SERVICE] - Positive Response		
Byte	**Contents**	**Value**
0	Service Positive Response Identifier	67h
1	AccessModeSendKey	02h
2	SecurityAccessStatus	34h

备注：如果是在低速转鼓上进行动态测试（速度<10kph），可忽略以上步骤
如需通过访问安全模式进入高速转毂动态测试(速度≥10kph),， Seed→Key的公式如下

((((seed>>1) XOR seed) <<3) XOR seed)

Remark: If EOL test was carried out on low speed roll (speed<10kph), please ignore above steps
If EOL test was carried out on high speed roll (speed≥10kph) via security access, Seed→Key formula as following

((((seed>>1) XOR seed) <<3) XOR seed)

©博世保留商标和专利应用在内的所有权力，未经我公司许可不得复制或传递给第三方。

© All rights with Robert Bosch GmbH, including trademark / patent applications. Any right of disposal, as copying and distribution to third parties is ours.

5.9 禁用阀组继电器关闭功能/ Valve relay shut down deactivation

TESTER → ECU: [SERVICE] – Request		
Byte	**Contents**	**Value**
0	Service Identifier	30h
1	InputOutputLocalIdentifier	1Fh
1	InputOutputControlParameter	03h

肯定的回复 Positive response

ECU → TESTER: [SERVICE] – Positive Response		
Byte	**Contents**	**Value**
0	肯定的服务回复标示 Service Positive Response Identifier	70h
1	InputOutputLocalIdentifier	1Fh
2	Status	01h

备注：如是通过访问安全模式（详见 5.8 章）进入高速转毂动态测试（速度≥10kph），请使用本服务指令确保阀组继电器关闭功已被禁用

Remark: If EOL test was carried out on high speed roll (speed≥10kph) via security access (chapter5.8), please apply this service to verify valve relay shutdown function deactivated

©博世保留商标和专利应用在内的所有权力，未经我公司许可不得复制或传递给第三方。

© All rights with Robert Bosch GmbH, including trademark / patent applications. Any right of disposal, as copying and distribution to third parties is ours.

5.10 开始轮速传感器测试 Start WSS Test

服务代码 Service Identifier	31h
记录本地标示 RoutineLocalIdentifier	06h
控制选项 ControlOption	01h
Duration (1LSB = 100ms)	xxh

肯定的回复 Positive response

服务代码 ServiceIdentifier:	71 H
记录本地标示 RoutineLocalIdentifier	06 H
ControlStatus (01h or 04h)	XX H

控制状态 Control Status:

Description	Value
Control/Routine Started successfully by the tester	01h
Control/Routine completed	02h
Control/Routine in progress	03h
Control/Routine stopped	04h
Control/Routine failure or Routine not run	05h

备注：持续时间需保证≥ 单个轮转动一周的时间
Remark: Duration time ≥ one tire's full round rolling spend time

©博世保留商标和专利应用在内的所有权力，未经我公司许可不得复制或传递给第三方。

© All rights with Robert Bosch GmbH, including trademark / patent applications. Any right of disposal, as copying and distribution to third parties is ours.

5.11 评估轮速传感器测试结果 Evaluation WSS Test Result

服务代码 ServiceIdentifier:	31 H
控制选项 RoutineLocalIdentifier:	06 H
控制选项=执行结果 Control option= Routine Result:	03 H

肯定的回复 Positive response

服务代码 ServiceIdentifier:	71 H	
局部代码 RoutineLocalIdentifier:	06 H	
执行状态 RoutineStatus :	02 H	
	高字节 High byte (Hex)	低字节 Low byte (Hex)
左前轮最大轮速 Wheel speed front left maximum	XX	XX
左前轮最小轮速 Wheel speed front left minimum	XX	XX
右前轮最大轮速 Wheel speed front right maximum	XX	XX
右前轮最小轮速 Wheel speed front right minimum	XX	XX
左后轮最大轮速 Wheel speed rear left maximum	XX	XX
左后轮最小轮速 Wheel speed rear left minimum	XX	XX
右后轮最大轮速 Wheel speed rear right maximum	XX	XX
右后轮最小轮速 Wheel speed rear right minimum	XX	XX

备注：
只有在“执行状态”为完成时，才有轮速数据输出。
车轮滚动至少一圈所获得的测试结果方有效。
如果测试过程中轮速最大值或最小值报错，结果将被置为 7FFFh。

Remark:
Bytes 3…18 are only sent if the “RoutineStatus = Routine completed”.
The test should be done during at least one complete wheel rotation.
If the test fails the minimum and maximum speed of a wheel speed sensor are set to 7FFFh.

©博世保留商标和专利应用在内的所有权力，未经我公司许可不得复制或传递给第三方。

© All rights with Robert Bosch GmbH, including trademark / patent applications. Any right of disposal, as copying and distribution to third parties is ours.

5.12 动态测试 Dynamic Test

诊断功能：开始执行程序 Diagnostic Function: StartRoutineByLocalIdentifier	
服务代码 ServiceIdentifier:	31 H
局部代码 RoutineLocalIdentifier:	05 H
控制选项 ControlOption:	01 H

Operator push brake pedal constant

1	Pump motor on																			
Data bytes	FF	FF	00	22	00	00	00	00	00	00	00	00	00	00	00	00	00	00	00	00
2	All inlet valves on																			
Data bytes	FF	FF	00	30	FF	FF	00	34	00	00	FF	FF	00	38	FF	FF	00	3C	t1	t1
3	Pressure release of all wheels, all outlet valves on																			
Data bytes	FF	FF	00	32	FF	FF	00	36	00	00	FF	FF	00	3A	FF	FF	00	3E	t2	t2
4	All outlet valves off																			
Data bytes	00	00	00	32	00	00	00	36	00	00	00	00	00	3A	00	00	00	3E	t1	t1
5	Pressure increase pulse FL																			
Data bytes	00	00	00	00	00	00	00	30	t3	t3	FF	FF	00	30	00	00	00	00	t1	t1
6	Pressure increase pulse FR																			
Data bytes	00	00	00	00	00	00	00	34	t3	t3	FF	FF	00	34	00	00	00	00	t1	t1
7	Pressure decrease pulse FL																			
Data bytes	00	00	00	00	FF	FF	00	32	t4	t4	00	00	00	32	00	00	00	00	t1	t1
8	Pressure increase pulse RL																			
Data bytes	00	00	00	00	00	00	00	3C	t5	t5	FF	FF	00	3C	00	00	00	00	t1	t1
9	Pressure decrease pulse FR																			
Data bytes	00	00	00	00	FF	FF	00	36	t4	t4	00	00	00	36	00	00	00	00	t1	t1
10	Pressure increase pulse RR																			
Data bytes	00	00	00	00	00	00	00	38	t5	t5	FF	FF	00	38	00	00	00	00	t1	t1
11	Pressure decrease pulse RL																			

©博世保留商标和专利应用在内的所有权力，未经我公司许可不得复制或传递给第三方。

© All rights with Robert Bosch GmbH, including trademark / patent applications. Any right of disposal, as copying and distribution to third parties is ours.

Data bytes	00	00	00	00	FF	FF	00	3E	t6	t6	00	00	00	3E	00	00	00	00	t1	t1
12	Pressure decrease pulse RR																			
Data bytes	00	00	00	00	FF	FF	00	3A	t6	t6	00	00	00	3A	00	00	00	00	t1	t1
Operator release brake pedal																				
13	All inlet valves off																			
Data bytes	00	00	00	30	00	00	00	34	00	00	00	00	00	38	00	00	00	3C	00	00
14	Pump after 2000 ms off																			
Data bytes	00	00	00	00	00	00	00	00	00	C8	00	00	00	22	00	00	00	00	00	00

建议时间：Time proposals:

t1 = 速度减少值的测量时间 试验测得
t2 = 所有轮子压力释放的时间 试验测得
t3 = 前轴压力增加的时间 试验测得
t4 = 前轴压力减少的时间 试验测得
t5 = 后轴压力增加的时间 试验测得
t6 = 后轴压力减少的时间 试验测得

t1 = waittime for speed reduction measurement defind by trial
t2 = time for pressure release cycle of all wheels defind by trial
t3 = time for pressure increase pulse at the front axle defind by trial
t4 = time for pressure decrease pulse at the front axle defind by trial
t5 = time for pressure increase pulse at the rear axle defind by trial
t6 = time for pressure decrease pulse at the rear axle defind by trial

备注：
电机自始至终都在动作。操作者得预先定义经验值的制动力，然后测试设备关闭所有进液阀保持压力，这一步是测试基础制动系统。然后所有出液阀开启，释放压力。动态测试执行在每个轮子上的压力的释放和增加的循环。为了减少时间，轮子的控制可以是重叠进行的。关闭所有进液阀后电机还要运行 2 秒，目的是排空蓄能器。
在压力增加和压力减少的循环中使用固定的时间以便进行数值的测量。
所有的动作均应通过试验确定。

Remarks:
The pump motor runs from the beginning to the end of the entire test. The operator has to achieve a sufficient brake force, than the tester set all inlet valves to pressure hold. This test step is for the execution of the base brake test. After the base brake test all outlet valves will be switch on and off to release the locked pressure. Then the dynamic test will be started with pressure release and increase cycles at the once wheels.
In order to minimize the test time, the wheel cycles of the axles can be overlapped. Switch all inlet valves off as well as the pump motor after 2000ms. This delay time is needed to discharge the accumulator chamber. Between the pressure increases and pressure releases cycles must be a stabilization time before the force values can be measured.
All activation times should be defined by trials.

©博世保留商标和专利应用在内的所有权力，未经我公司许可不得复制或传递给第三方。

© All rights with Robert Bosch GmbH, including trademark / patent applications. Any right of disposal, as copying and distribution to third parties is ours.

时间设置必须根据不同的测试设备和车型来决定！所有博世推荐的时间值必须通过试验来确定，该试验由客户来完成。
The timings must be individually suited per the dynamic behavior of the vehicle on the test rig!
All proposed times are recommended values by Bosch and must be confirmed by trials. These trials must be done by the customer.

肯定的回复 Positive response

ECU → TESTER: [SERVICE] - Positive Response		
Byte	**Contents**	**Value**
0	Service Positive Response Identifier	71h
1	RoutineLocalIdentifier	05h
2	ControlStatus	Xxh
3..4	Result, delta wheel speed front left (1LSB = (1/64)m/s)	Xxxxh
5..6	Result, delta wheel speed front right (1LSB = (1/64)m/s)	Xxxxh
7..8	Result, delta wheel speed rear left (1LSB = (1/64)m/s)	Xxxxh
9..10	Result, delta wheel speed rear right (1LSB = (1/64)m/s)	Xxxxh

控制状态 Control Status:
01 = start successful
02 = already started
03 = not possible to start

©博世保留商标和专利应用在内的所有权力，未经我公司许可不得复制或传递给第三方。

© All rights with Robert Bosch GmbH, including trademark / patent applications. Any right of disposal, as copying and distribution to third parties is ours.

5.13 写入下线检测过程控制字节 Write EOL Process Control Byte

诊断功能：写入字节 Diagnostic function: WriteDataByLocalIdentifier	
服务代码 ServiceIdentifier:	3B H
记录局部代码 RecordLocalIdentifier:	03 H
状态 Status:	XX H

肯定的回复 Positive response

服务代码 ServiceIdentifier:	7B H
记录局部代码 RecordLocalIdentifier:	03 H

例如：Example:

状态 Status:	数值 Value
EOL 没有完成 End-of-line test not completed	00 H
EOL 成功并完成 End-of-line test completed and ok	AA H
EOL 完成但不成功 End-of-line test completed and not ok	EE H

*博世交付的产品预写入值为 FFh/ Bosch delivery state is FFh.

备注：
电子控制单元用预定义的程序字节“FF 十六进制”送到客户的装配线。该号码被博世保留，以防一个不成功的通讯该数据将还保留在电子控制单元的电可擦除可编程只读存储器中。
在成功的抽真空加注的情形下，将写入客户定义的数值，该数值应得到测试软件的校验。
在写入过程字节之前需进入安全模式级别1，具体操作详见本文献中第5.8章关于如何进入安全模式的方法。
数据正确 ⇒ 继续
数据错误 ⇒ 故障信息，继续

Remarks:
The ECU is shipped to the customers' assembly line with a predefined process byte: “FF Hex”. In case of a non successful communication this data will still stay in the EEPROM of the ECU (“incorrect“).
In case of a successful evac/fill process the value will be changed in a defined value of the customer. The ECU data must be verified with the limit data of the tester software.
There is a must before write the process byte which is the service of security access Level 1, detailed information refer chapter5.8 in this document.
Data correct ⇒ Continue
Data not correct ⇒ Failure message, continue

©博世保留商标和专利应用在内的所有权力，未经我公司许可不得复制或传递给第三方。

© All rights with Robert Bosch GmbH, including trademark / patent applications. Any right of disposal, as copying and distribution to third parties is ours.

5.14 启用阀组继电器关闭功能 Valve relay shutdown activation

激活阀组继电器关闭 Valve relay shut down activation

诊断功能：激活阀组继电器关闭 Diagnostic Function: Valve relay shut down activation	
服务代码 ServiceIdentifier:	30 H
局部代码 LocalIdentifier:	1F H
控制选项 ControlOption	02 H

肯定的回复 Positive response

服务代码 ServiceIdentifier:	70 H
局部代码 LocalIdentifier:	1F H
控制状态 ControlStatus	04 H

备注：
除通过上述命令来激活速阀组继电器关闭功能外，该步骤还可以通过复位点火开关来实现。
Remark:
Above commands can realize the function of valve relay shut down activation, besides it also can be realized by reset ignition switch.

5.15 结束诊断 End of diagnostics

Diagnostic Function: Request	
服务代码 ServiceIdentifier:	82 H

肯定的回复 Positive Response

服务代码 ServiceIdentifier:	C2 H

©博世保留商标和专利应用在内的所有权力，未经我公司许可不得复制或传递给第三方。

© All rights with Robert Bosch GmbH, including trademark / patent applications. Any right of disposal, as copying and distribution to third parties is ours.

6 阀保护措施 Valve protective measures

	ABS
Valve:	**诊断模式 Diagnostic mode**
EV 7,3 Ω	如果阀启动值 > 0%（在客户诊断中只允许 100%全时启动），则上/下计数器以 2/1 的上/下比开始计数，限时 30s；每个进液阀都有单独的计数器。 If valve activation value > 0% (via customer diagnosis only full time =100% activation possible); than start the up/down counter and count with a ratio up/down = 2/1; limited to 30s; for each EV valve a separate counter is used
AV 7,3 Ω	如果阀启动值 > 0%（在客户诊断中只允许 100%全时启动），则上/下计数器以 2/1 的上/下比开始计数，限时 30s；每个出液阀都有单独的计数器。 If valve activation value > 0% (via customer diagnosis only full time =100% activation possible); than start the up/down counter and count with a ratio up/down = 2/1; limited to 30s; for each AV valve a separate counter is used

备注：
在诊断模式下，所有阀保护措施都被激活，无法关闭。
Remarks:
All valve protection measurements are active in the diagnostic mode. These measurements can not be switched off.

备注：
阀组与电机保护功能是不可关闭的，当温度过高或压力过大时保护系统开始工作。
Remarks:
The described valve and PM protection measures are always switched on. They cannot be disabled.

©博世保留商标和专利应用在内的所有权力，未经我公司许可不得复制或传递给第三方。

© All rights with Robert Bosch GmbH, including trademark / patent applications. Any right of disposal, as copying and distribution to third parties is ours.

Gen 9: Valve protection measure: Up/down counter with a ratio of = 2/1

Example: Outlet valve with a maximum limitation to 30 seconds

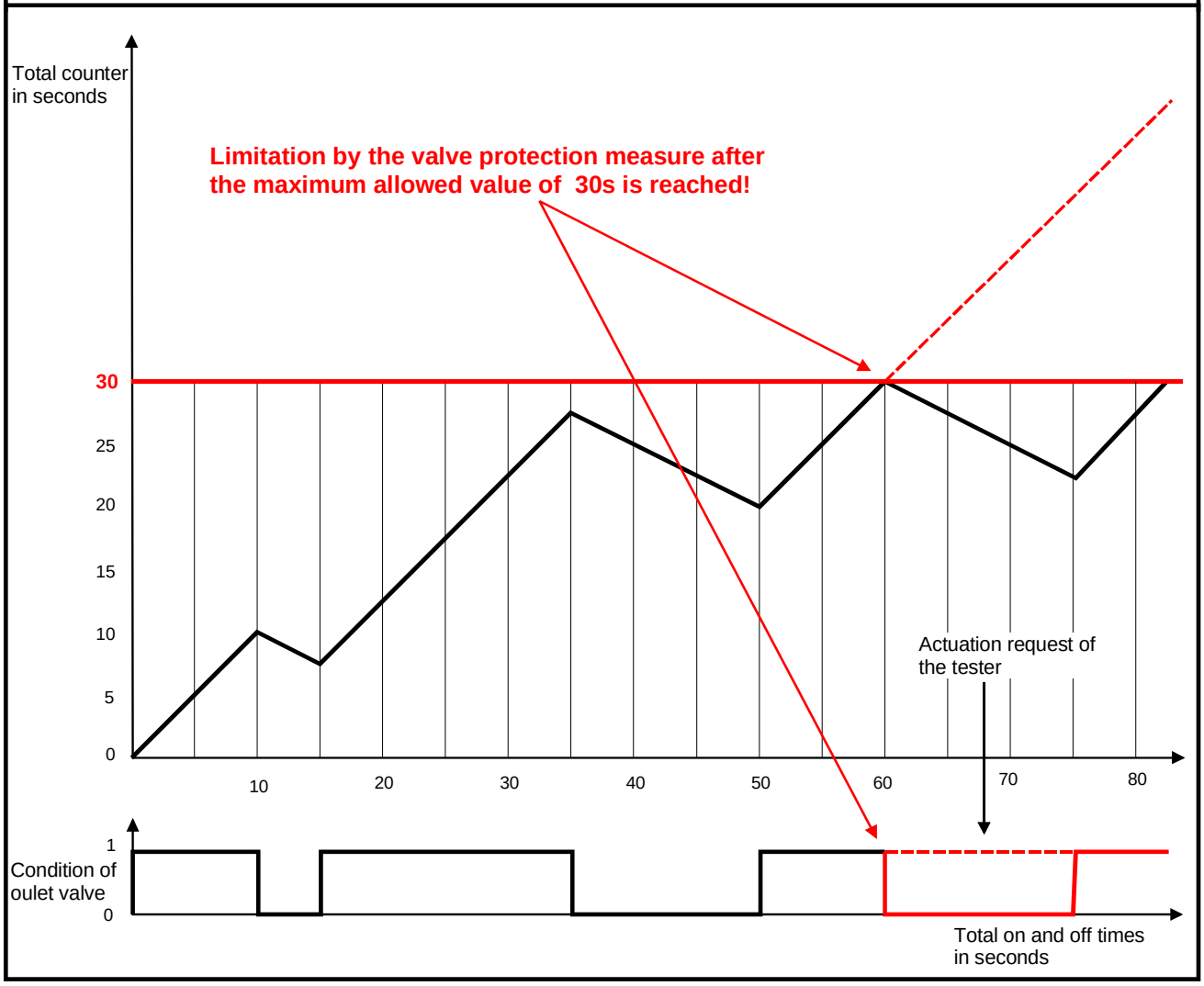

备注：
阀保护措施强制保护阀电磁线圈与 ECU 免于过热。冷却时间足够后阀组方能再度启动。当系统重新启动以后阀保护措施会根据电磁阀线圈的阻值来计算是否需要冷却时间来启动阀。即便是阀保护措施也无法保证阀电磁线圈和 ECU100%安全。因此，客户有责任确保阀启动序列正确！

Remarks:
The forced limitation by the valve protection measure is active as long as valve coils and the ECU are sufficient protected against damages caused by overheating. Only after an appropriate cooling time the valves can be activated again.

©博世保留商标和专利应用在内的所有权力，未经我公司许可不得复制或传递给第三方。

© All rights with Robert Bosch GmbH, including trademark / patent applications. Any right of disposal, as copying and distribution to third parties is ours.

To guarantee a sufficient cooling time also after restart of the system (e.g. ignition cycle) the provided coil resistance values are evaluated by the valve protection measure. The resistance the coils are measured after each system power up and then cyclic all 20 seconds. These values are used to initialize the up and down counter value for the EV and AV coils. Caused by different reasons the described valve protection measurements cannot protect the valve coils and the ECU with 100% safeness. That's the reason why the customer is rABSonsible to ensure a correct valve activation sequence!

©博世保留商标和专利应用在内的所有权力，未经我公司许可不得复制或传递给第三方。

© All rights with Robert Bosch GmbH, including trademark / patent applications. Any right of disposal, as copying and distribution to third parties is ours.

7 测试设备信息 Test Rig Information

测功机设计：
该测试可在 4 个独立的转毂上进行。

诊断信息：
诊断电脑和车辆应尽可能的接近，以避免出现任何通讯故障。
为了减少测试时间，消息之间以及消息内部字节之间的时间间隔应尽可能地接近最小可能值。
所有其他的诊断信息和功能都需根据客户要求决定。

标志字节：
抽真空加注的标志字节必须有客户或其抽真空加注/人工排气设备的供应商确定。

轮速传感器测试：
在检查轮速传感器相关性时，如果有可能，通过设置不同的时间延迟使每个车轮在不同的时间开始转动。

阀动态测试：
为了最小化整个测试时间，减压/增压循环可以重叠。

编辑菜单：
在生产过程中，由于软件的升级，可能需要修改 ECU 的识别码，所以编辑菜单的设置对于修改识别码非常重要。
阀的动态测试时间设置必须通过试验尝试确定。
阀的动作循环时间设置，例如执行时间和稳定时间，必须包含在编辑菜单中。
为了简单的修改，编辑菜单中同样需要包含待评估数据的上、下限值。

车辆型号（车重，长短轴局，车身型号）：
由于存在各种不同型号和结构的车辆，在 ABS 动态测试的电磁阀工作循环过程中，可能需要不同的执行次数。这些数据必须存在测试设备的单独参数文件中，并且易于通过编辑菜单修改。当进入测试设备时，应该通过条形码或者操作者的选择完成车辆型号的选择。

测试协议：
如果实验结果正确，打印“测试通过”。
如果测试结果不良，必须打印失败结果。
失败结果必须包括测试失败步骤的所有测试数据以便于原因分析。
必须按要求提供所有实验结果的测试协议。

车辆状态：
为了向系统充分供电，蓄电池必须完全充电。为了保持供电正常，发动机可保持工作。

Dynamometer design:
The test is designed to be performed on a roller dynamometer.
To allow individual wheel test cycles the rolls of each wheel should be independently driven by the test rig drives.

Diagnostic Information:
The diagnostic computer should be as close as possible near the vehicle to avoid communication problems.

©博世保留商标和专利应用在内的所有权力，未经我公司许可不得复制或传递给第三方。

© All rights with Robert Bosch GmbH, including trademark / patent applications. Any right of disposal, as copying and distribution to third parties is ours.

The timing (time gaps between messages and bytes within messages) should be set close to the minimum possible limits in order to reduce the test time.
All other additional diagnostic information and functions is customer specific.

Process Byte:
The final definition of the process byte data must be taken from the supplier of the evac/fill- and repair bleed equipment or the customer.

Wheel Speed Sensor Test:
The correlation check is executed by starting the individual rolls with a delay between each wheel if possible.

Dynamic Valve Tests:
To minimize the entire test time, the pressure release / increase cycles can be overlapped.

Editor menus:
ECU Identification codes may change during production due to updates of software revisions.
It is important to set up the software program to modify identification numbers easily by using an editor menu.
The timing of the dynamic valve test must be found during test trials.
Timing of valve actuation cycles, such as actuation times and stabilization times should be included in an editor menu.
Upper and lower limit values for evaluation should also be included in an editor menu for simple adaptation or modifications.

Vehicle Types (weight, long wheel base, short wheel base, body type):
Due to the various vehicle types and configurations, different actuation times for the valves cycles of the dynamic ABS test might be required. These data should be available in separate parameter file within the test equipment software and also easily be modified by using an editor menu.
The selection of the vehicle type should be done by either a bar code reading or an operator selection when driving into the test rig.

Test protocol:
In case of an OK test result, a print out (”test passed”) is made.
In case of a NOK test result, a failure protocol must be printed out.
This protocol must include all test data of the test step that failed in order to allow a better failure analysis.
An entire test protocol of all test results must be available on request.

Vehicle conditions:
The battery must be charged properly in order to allow a sufficient power supply to the system.
The engine can be running in order to apply a sufficient power supply.

©博世保留商标和专利应用在内的所有权力，未经我公司许可不得复制或传递给第三方。

© All rights with Robert Bosch GmbH, including trademark / patent applications. Any right of disposal, as copying and distribution to third parties is ours.

8 附件 Attachments

8.1 ABS II 型回路液压图 ABS with II brake split circuit Hydraulic Circuit Diagrams

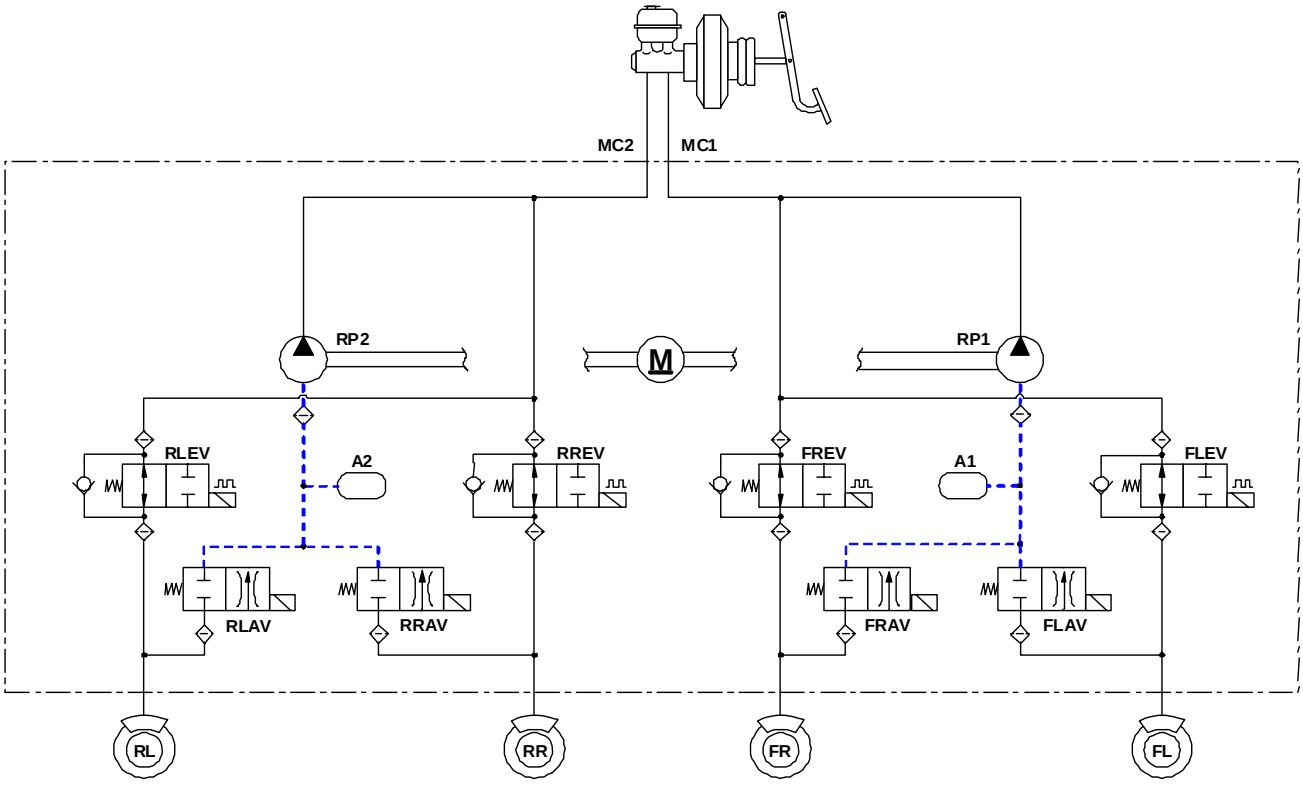

备注：图中虚线部分为第二回路，其他部分为第一回路。
Remarks: Secondary circuit are marked with dash line in diagrams, the others are all primary circuit.

©博世保留商标和专利应用在内的所有权力，未经我公司许可不得复制或传递给第三方。

© All rights with Robert Bosch GmbH, including trademark / patent applications. Any right of disposal, as copying and distribution to third parties is ours.

8.2 SGMW CN100 ABS9 总成图纸 SGMW CN100 ABS9 Offer Drawing

©博世保留商标和专利应用在内的所有权力，未经我公司许可不得复制或传递给第三方。

© All rights with Robert Bosch GmbH, including trademark / patent applications. Any right of disposal, as copying and distribution to third parties is ours.

8.3 SGMW CN100 电气线路图 SGMW CN100 ABS9 Wiring Diagrams

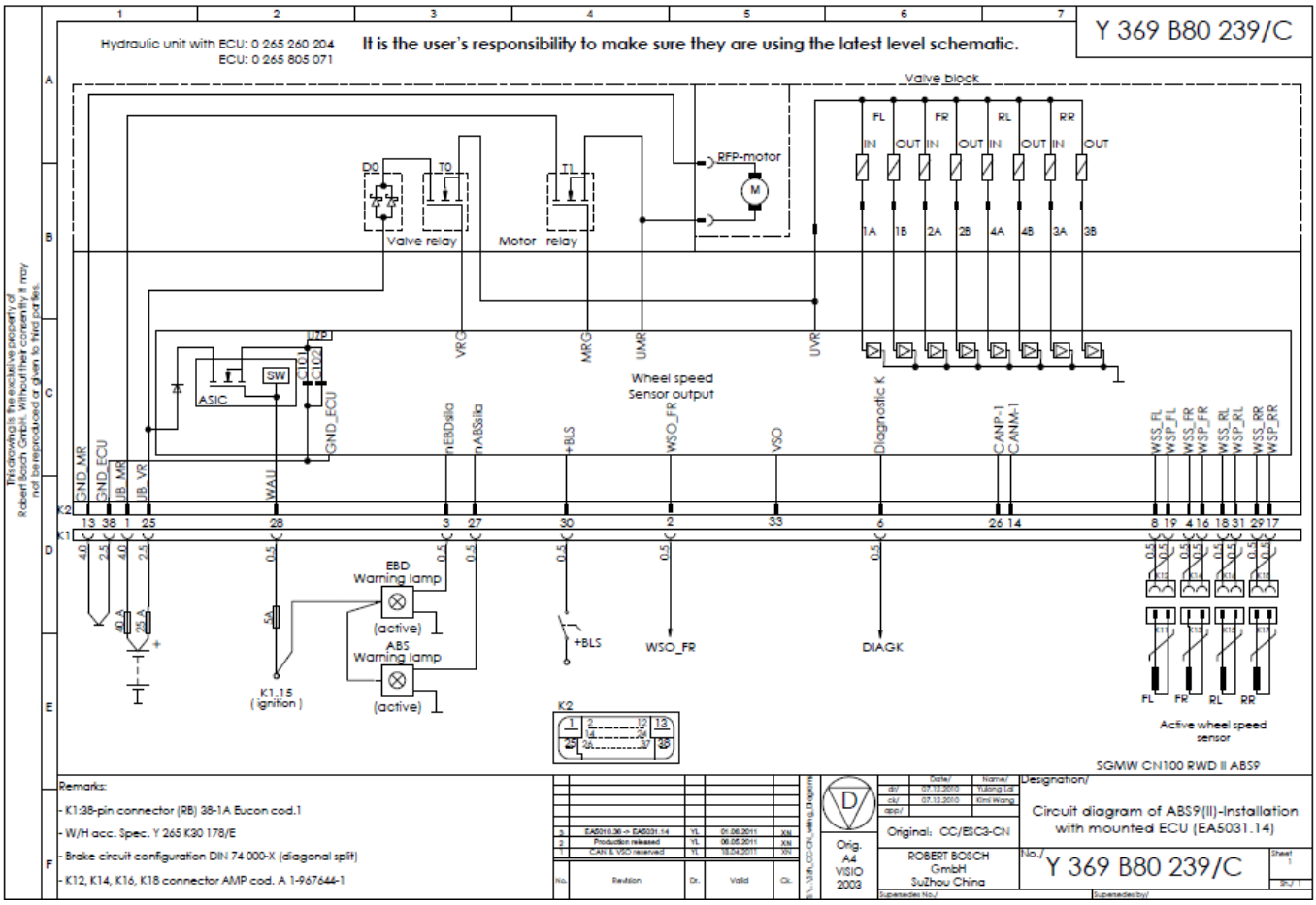

©博世保留商标和专利应用在内的所有权力，未经我公司许可不得复制或传递给第三方。

© All rights with Robert Bosch GmbH, including trademark / patent applications. Any right of disposal, as copying and distribution to third parties is ours.